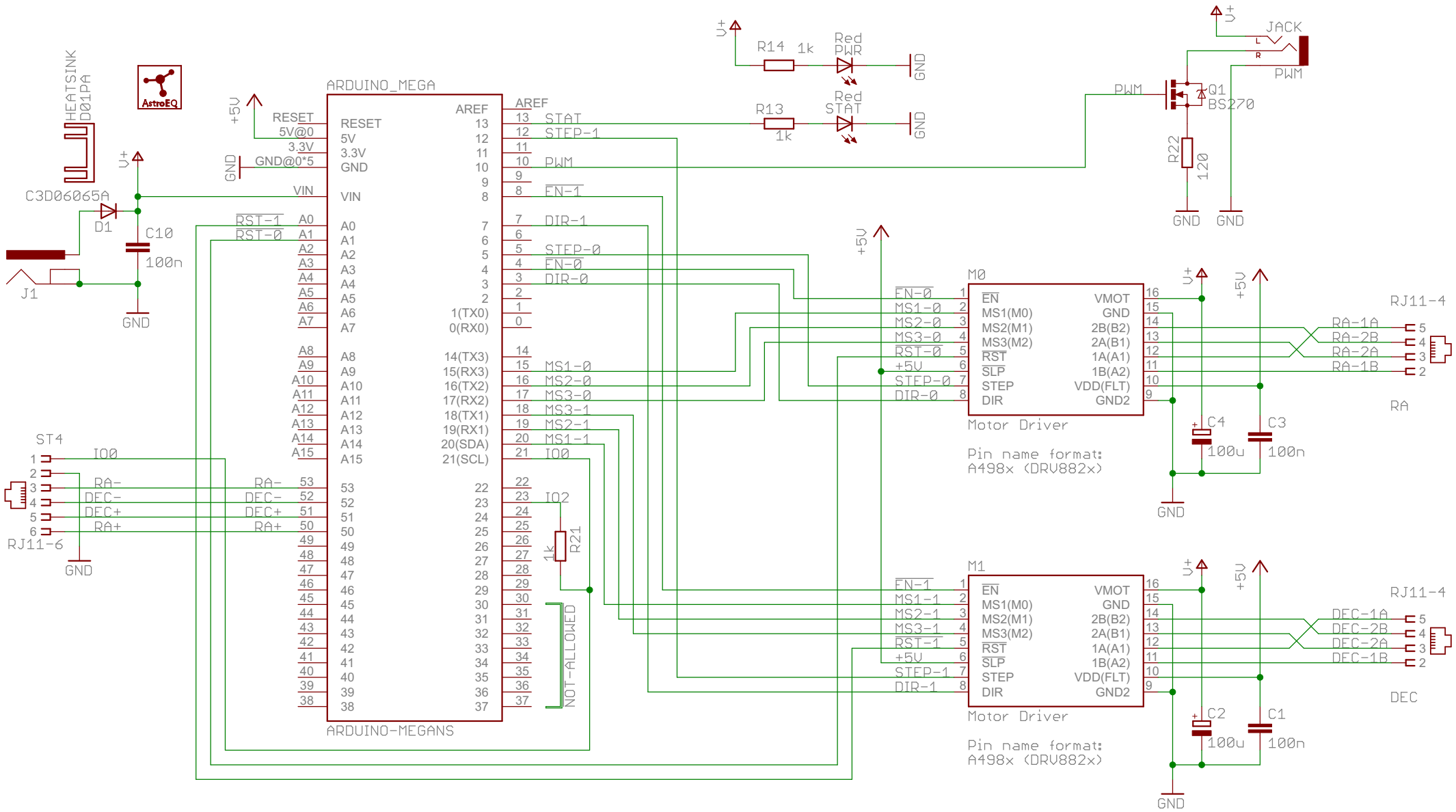
HEATSINK
D01PA
AstroEQ
C3D06065A
D1
C10
100n
J1
GND
V+
+5V
ARDUINO_MEGA
ARDUINO-MEGANS
RESET
5V@0
3.3V
GND@0*5
VIN
RST-1
RST-0
RA-
DEC-
DEC+
RA+
IO0
IO2
R21
1k
NOT-ALLOWED
ST4
RJ11-6
R14
1k
Red
PWR
R13
1k
Red
STAT
STAT
STEP-1
PWM
EN-1
DIR-1
STEP-0
EN-0
DIR-0
MS1-0
MS2-0
MS3-0
MS3-1
MS2-1
MS1-1
JACK
PWM
Q1
BS270
R22
120
M0
M1
EN
MS1(M0)
MS2(M1)
MS3(M2)
RST
SLP
STEP
DIR
VMOT
GND
2B(B2)
2A(B1)
1A(A1)
1B(A2)
VDD(FLT)
GND2
Motor Driver
Pin name format:
A498x (DRV882x)
C4
100u
C3
100n
C2
100u
C1
100n
RJ11-4
RA-1A
RA-2B
RA-2A
RA-1B
RA
DEC-1A
DEC-2B
DEC-2A
DEC-1B
DEC